PILOT

TNC 360

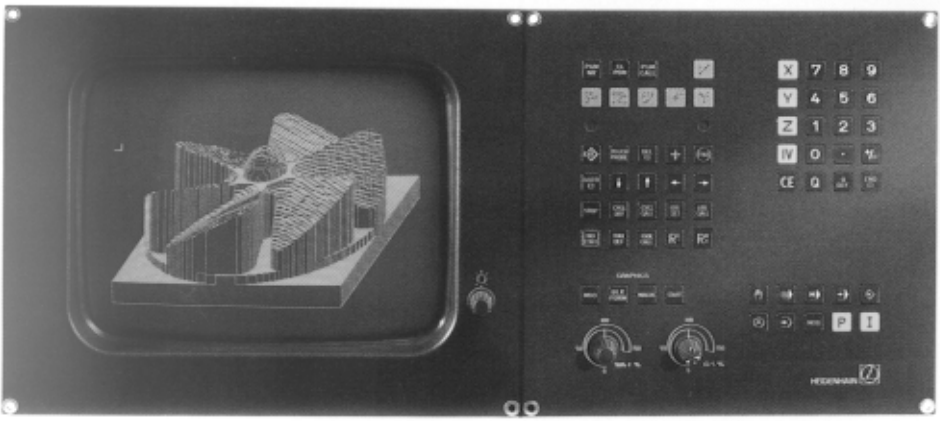

October '91

HEIDENHAIN

Contents

Comprehensive information on programming possibilities can be found in the Operating Manual.

HEIDENHAIN is constantly working on further developments of its TNC controls. It is therefore possible that details of certain control versions may deviate from the versions explained in this programming PILOT.

Key to Symbols

Dialog initiation key

Program block on screen

```
11 L X+20 Y+10
RL F180 M13
```

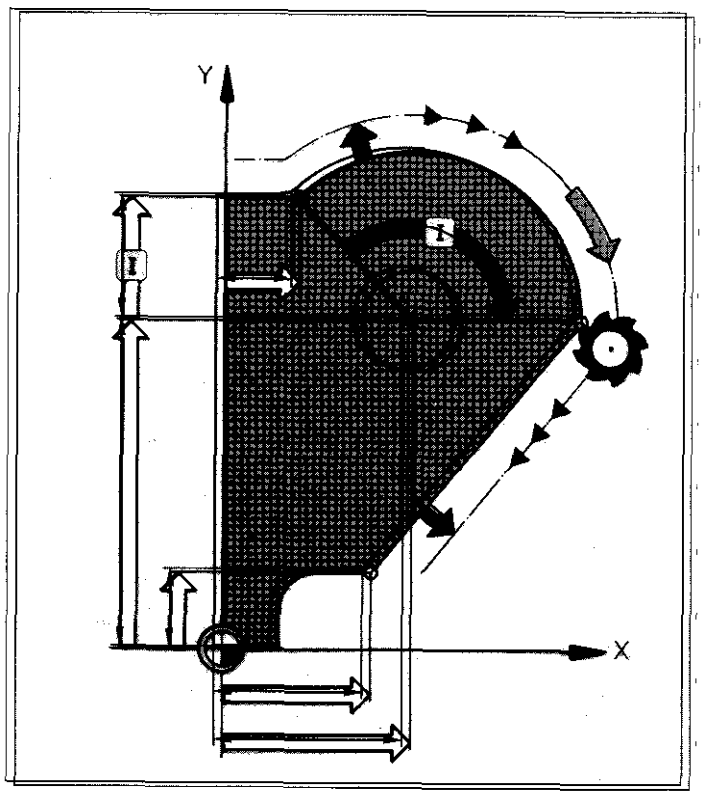

Notes

Tool position in the illustrations: Prior to program block execution, the tool is at the start position.

The color designation has the following meaning unless otherwise stated in the specific diagrams (e.g. explanation of cycles).

Dimensions	Absolute	
	Incremental	I
	Positive angle (counter-clockwise)	PA/ROT +
	Negative angle (clockwise)	PA/ROT –
	Positive rotation	DR +
	Negative rotation	DR –
Tool path	Straight	
	Circular	
Radius compensation		RL/RR

Path Compensation

Radius compensation

Tool in milling direction		
to the **left** of contour:	RL	
to the **right** of contour:	RR	
on the contour:	R0	

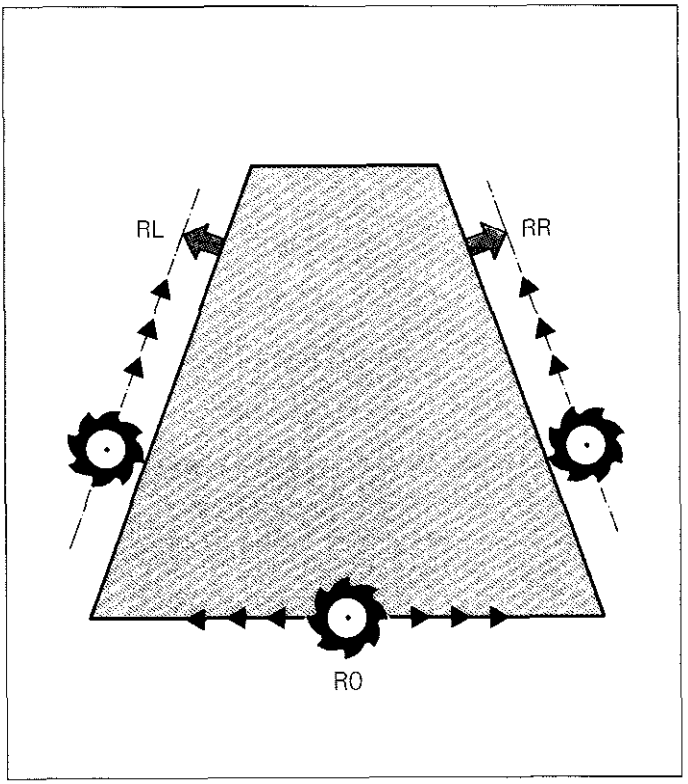

Reference Axes

Working planes

The polar coordinates angle PA and rotation angle ROT are referenced to the reference axis:

Working plane	Reference axis	+ 90°-axis
X, Y	+ X	+ Y
Y, Z	+ Y	+ Z
Z, X	+ Z	+ X

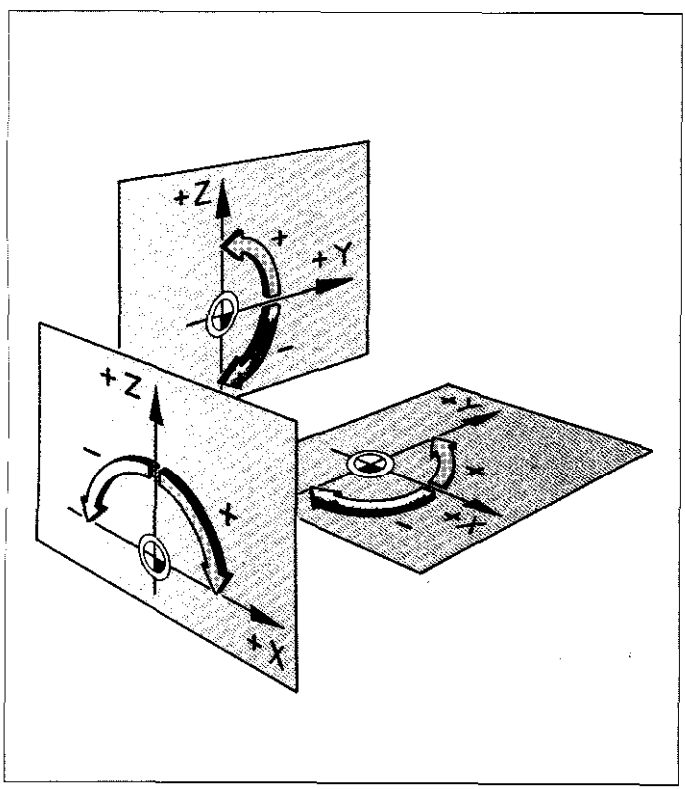

TOOL DEF

Tool Definition

```
15 TOOL DEF 28        L+12.5
                      R+10
```

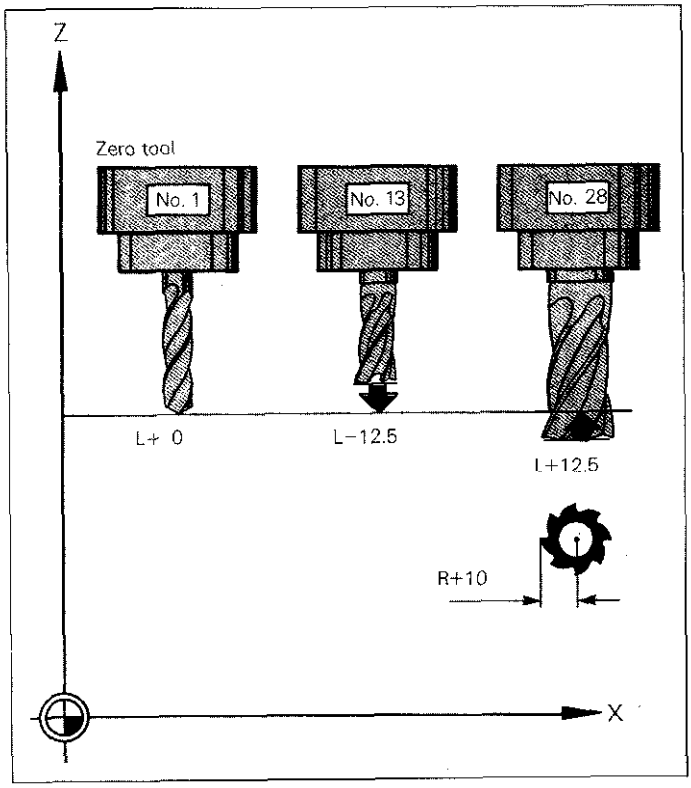

Tool length compensation:

Compensation values are referenced to the "zero tool".

Tools longer than the zero tool:
− sign

Tools shorter than the zero tool:
− sign

Tool Call

TOOL CALL

```
16 TOOL CALL 0          Z
17 L  X+30          Y+26
      Z+40          R0
18 STOP
                                M05
19 TOOL CALL 28         Z
             S 125
```

Cancellation of current tool compensation values

Tool change position.

Program run STOP (for manual tool change)

Call-up of next tool with appropriate compensation values.

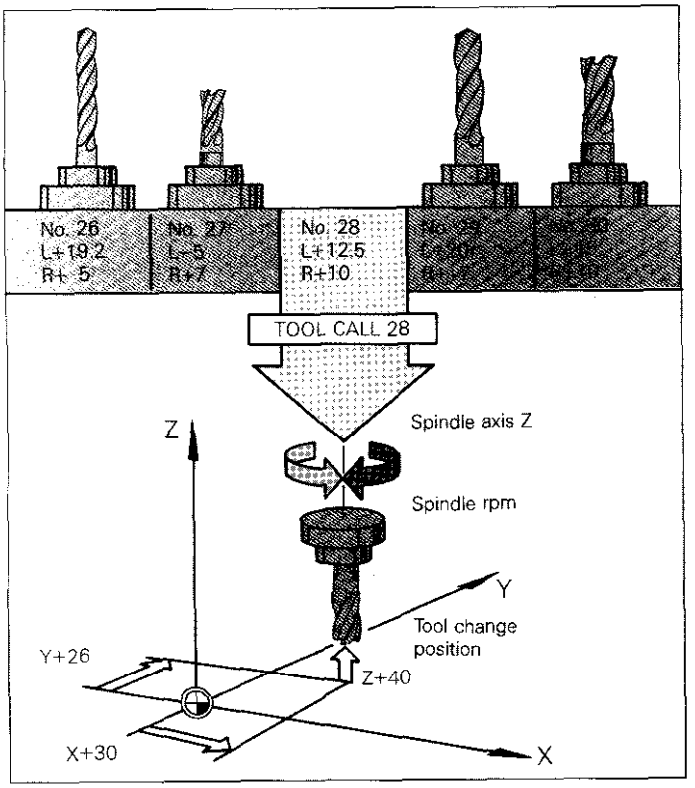

When traversing to the tool change position, take care that the tool does not collide with the workpiece!

The rotating direction of the spindle is determined by a miscellaneous function: M03/M04 or M13/M14 (right/left).

Linear Milling

Cartesian (right-angled) coordinates

```
49 L  X+42          Y+62
                    RL F180
```

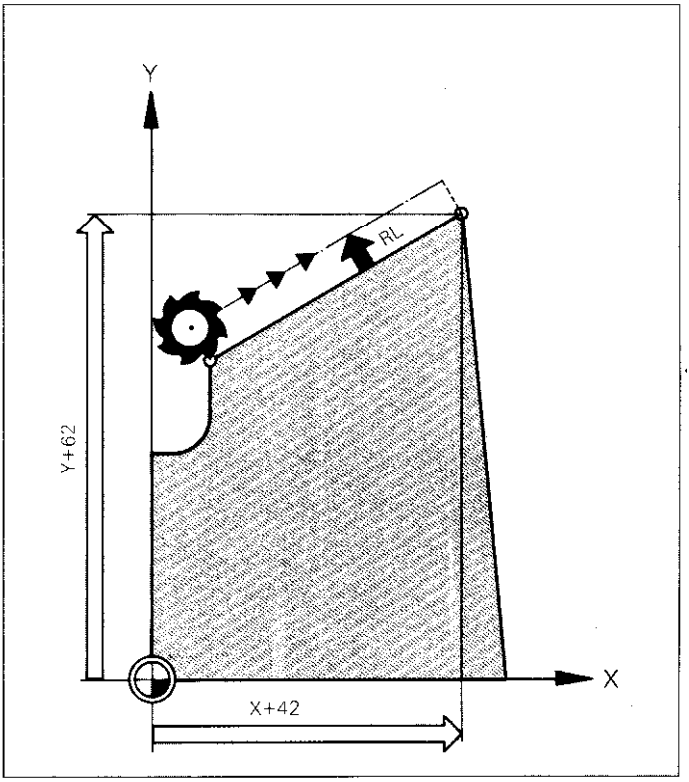

Linear Milling

Polar coordinates

```
57  CC  X+8              Y+43
58  LP   PR+40            PA+30
                        RL
```

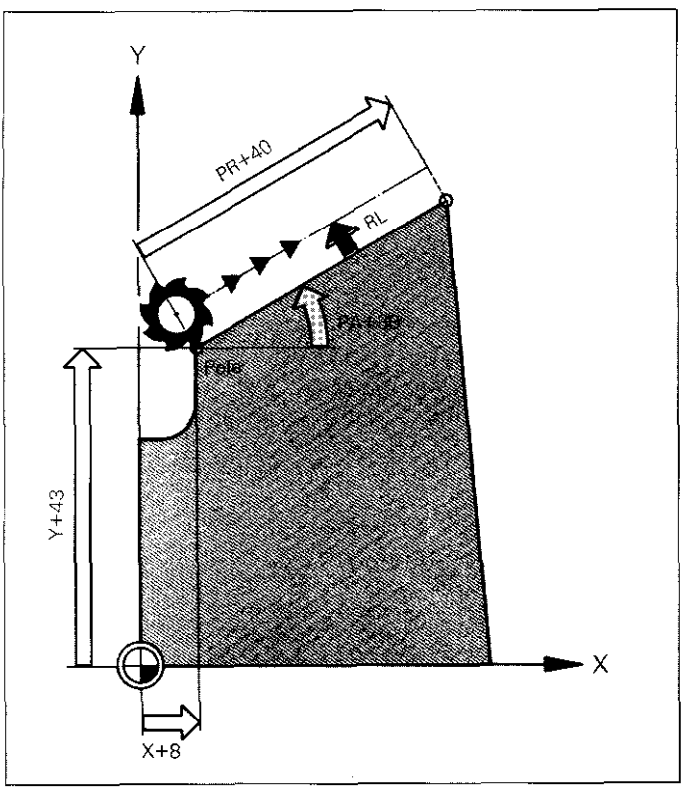

Before entry of polar coordinates, define pole via the CC-key.

The pole must be programmed in Cartesian coordinates only!

If the pole remains the same for several blocks, a new entry is not required.

Chamfer

Auxiliary position P_2	95	L	X+47	Y+57
				RL F180
Chamfer side length L	96	L	14.5	
Contour position P_3	97	L	X+52	Y+0

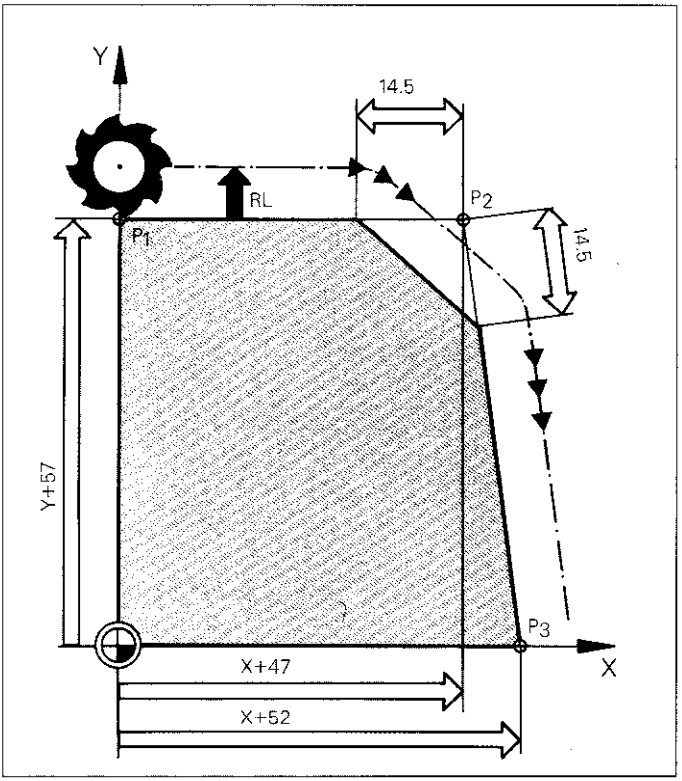

Notes

Circular Interpolation

Specification via center and end position
End position in Cartesian (right-angled) coordinates

Circle center	5	CC	IX+44	IY+9	
Contour position P_2	6	C	X+51	Y+16	
				DR+	RL F120

Contour position P_1 (X16/Y51) has been previously approached.

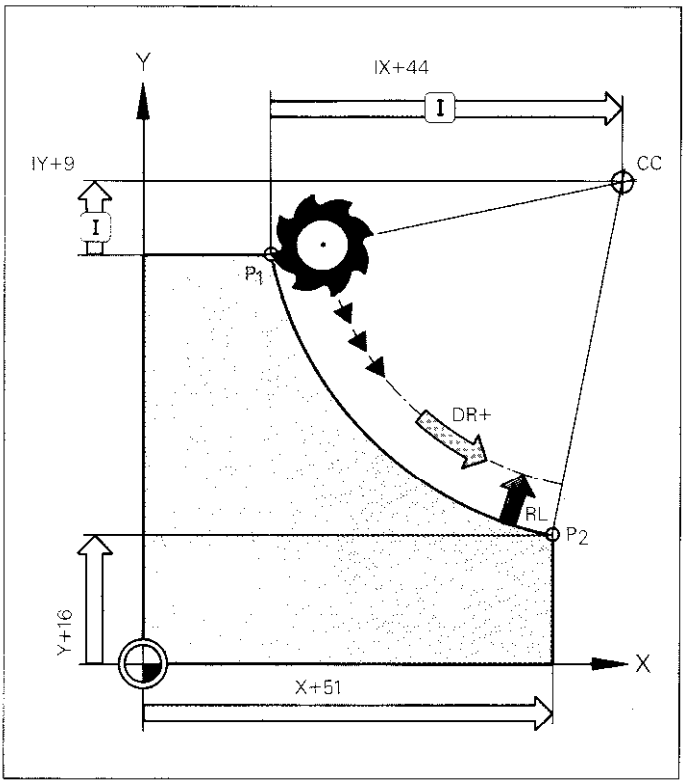

- CC in absolute dimension is referenced to the program zero point.
- CC in incremental dimension is referenced to the previous contour position.

Circular Interpolation

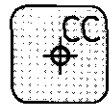

Specification via center and end position
End position in polar coordinates

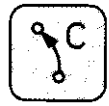


```
5   CC X+60          Y+60                    Circle center/pole
6   CP IPA+67                                Contour position P2
                DR+ RL F120    M
```

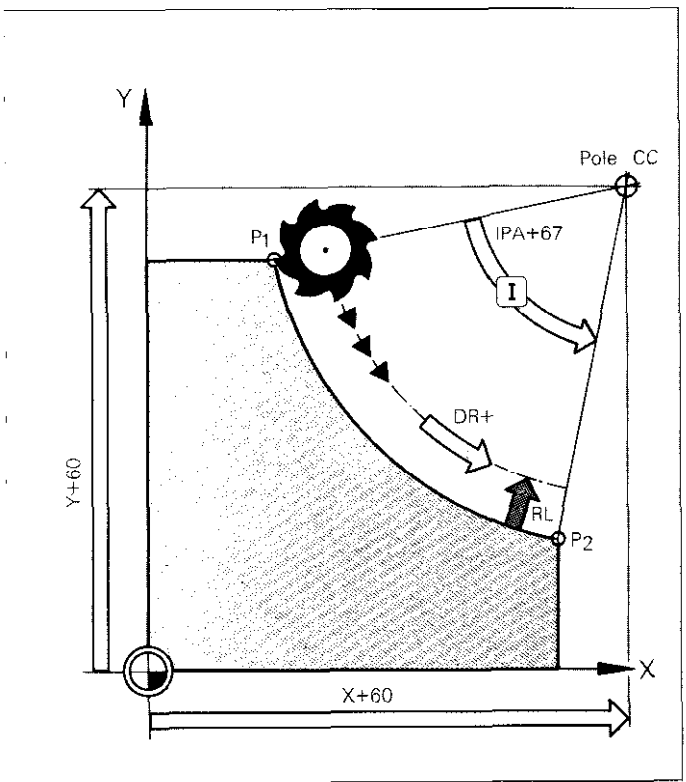

Before entry of polar coordinates, define pole via the CC-key.

The pole must be programmed in Cartesian coordinates only!

Determination of the arc end position only with polar coordinate angle PA.

Circular Interpolation

Specification via radius and end position

Contour position P_2

```
6   CR X+51        Y+16
      R+45       DR+ RL F120
```

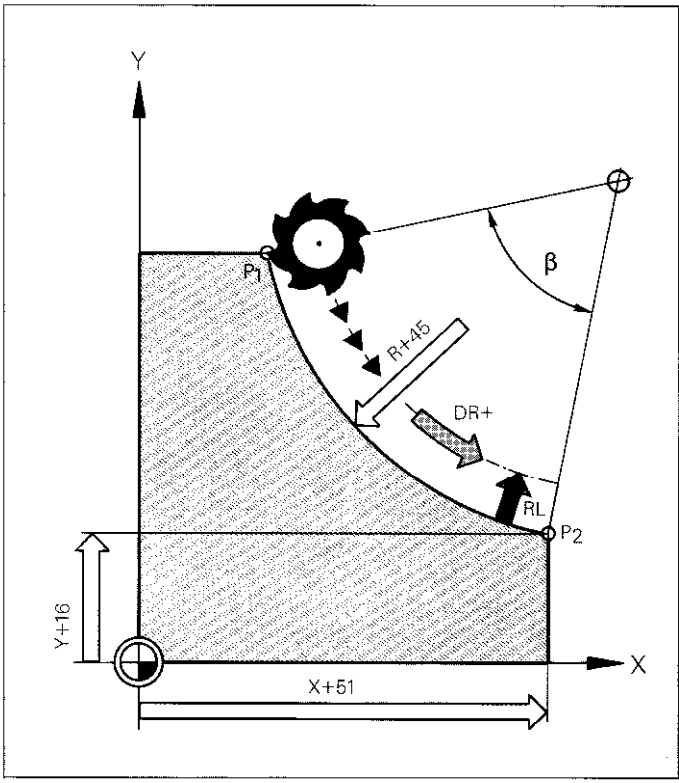

Circle radius Sign R:

Center angle β less than 180°: R+,

Center angle β greater than 180°: R–.

Rounding of Corners


```
39 L   X+47          Y+49
                    RL F120
40 RND R9.5
                       F80
41 L   X+51.5       Y+0
                       F120
```

Auxiliary position P_2

Rounding off radius R

Contour position P_3

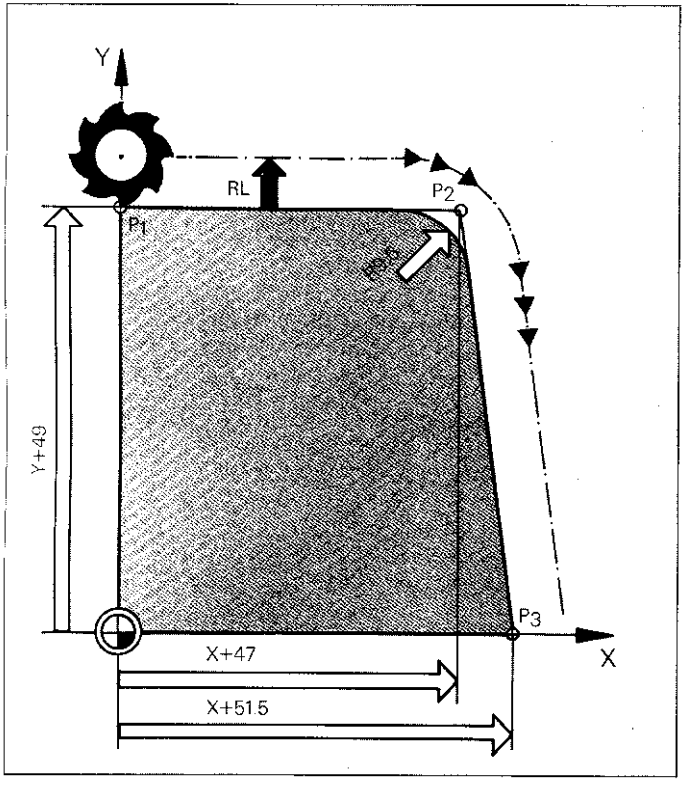

Before and after an RND block a positioning block containing both coordinates of the machining plane must be programmed.

Circular Interpolation

Tangential contour connection
Cartesian coordinates

End position P_2 of straight	21 L X+27	Y+52.5 RL F100
End position P_3 of connecting arc	22 CT IX+31	IY-9.5 RL

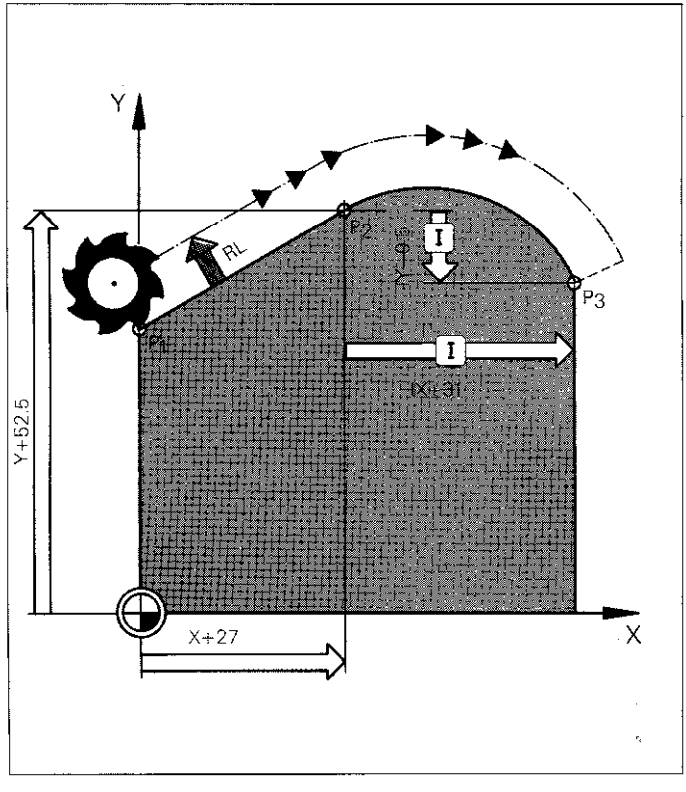

A contour element (straight or arc) having coordinates within the same working plane must already be programmed before the connecting arc.

Circular Interpolation

Tangential contour connection
Polar coordinates

```
45  L   X+27          Y+52.5
                     RL  F100
46  CC  X+27          Y+34
47  CTP PR+32          IPA-70
```

End position P_2 of straight

End position P_3 of connecting arc

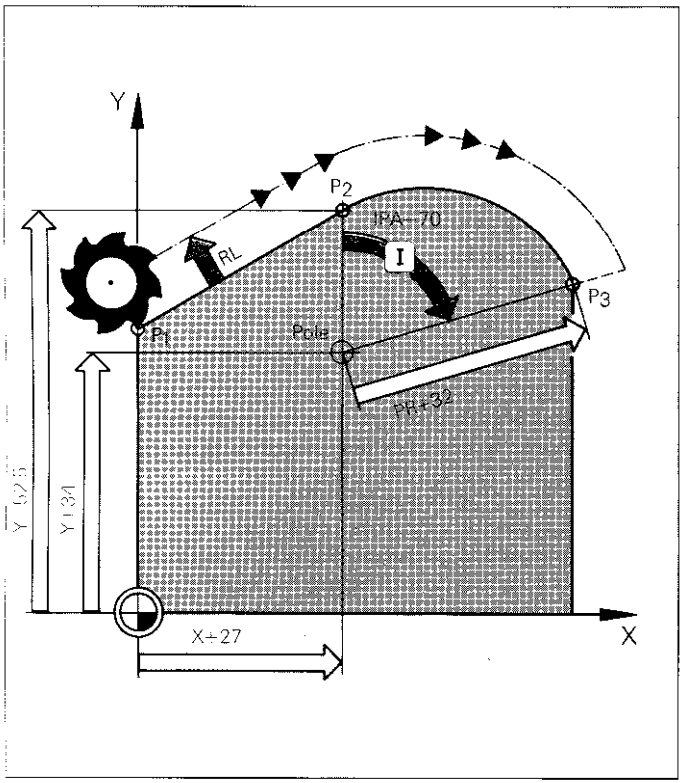

Before entry of polar coordinates, define pole via the CC-key.

The pole must be defined in Cartesian coordinates only.

A contour element (straight or arc) having coordinates within the same working plane must already be programmed before the connecting arc.

Helical Interpolation

```
64 CC X+30          Y+21
65 CP IPA-2520      IZ-12
                DR- RL F80
```

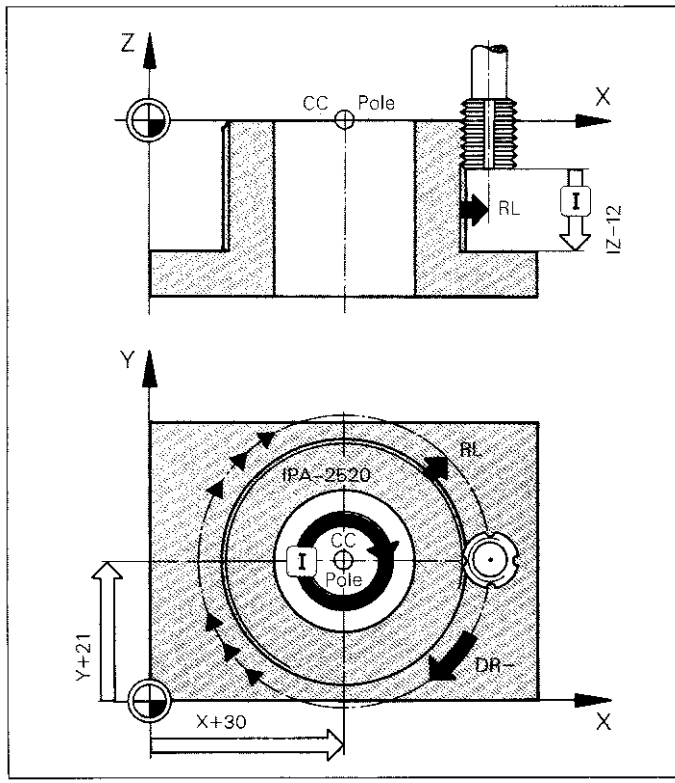

Define pole CC beforehand and approach to starting position.

Specify angle PA in incremental only!

Polar coordinates angle PA is calculated as follows:

PA = 360 x IZ/P

IZ: Downfeed distance
P: Pitch of thread

Helical Interpolation

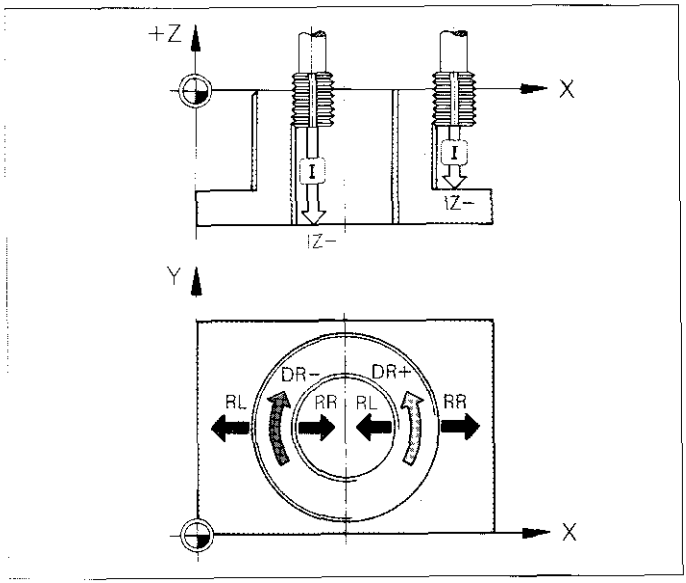

Right-hand thread
External: down-cut milling
Internal: up-cut milling

Left-hand thread
External: up-cut milling
Internal: down cut milling

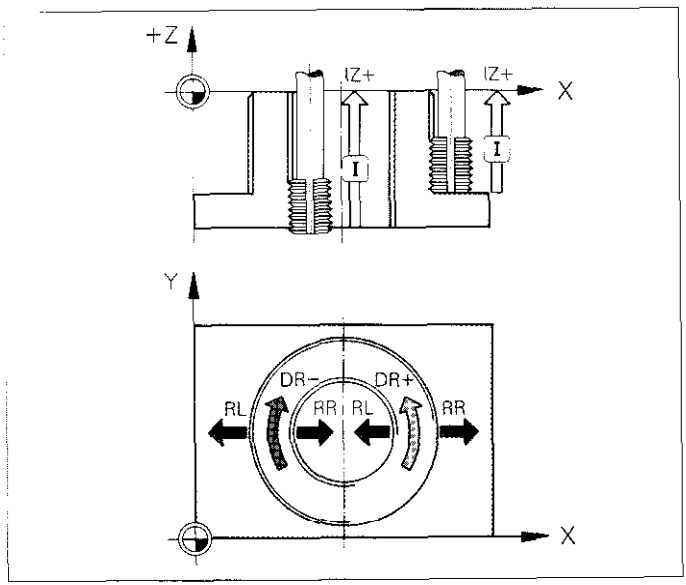

Right-hand thread
External: up-cut milling,
Internal: down-cut milling.

Left-hand thread
External: down-cut milling,
Internal: up-cut milling.

Contour Approach on an Arc

Starting position P_1 with R0	79 L X+42	Y+81 R0 F MAX
Contour position P_2 with RL (RR)	80 L X+11	Y+52 RL F80
Rounding off radius	81 RND R12	

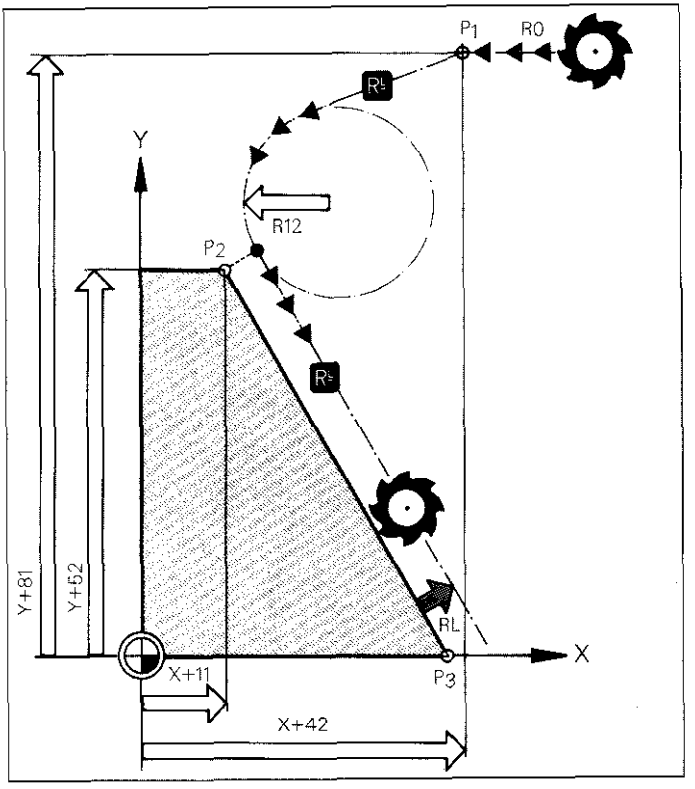

Before and after an RND block a positioning block containing both coordinates of the machining plane must be programmed.

Contour Departure on an Arc

89 L X+36 Y+18 RL F80		Contour position P_3 with RL (RR)
90 RND R15		Rounding off radius
91 L X+67 Y+49 R0		End position P_4 with R0

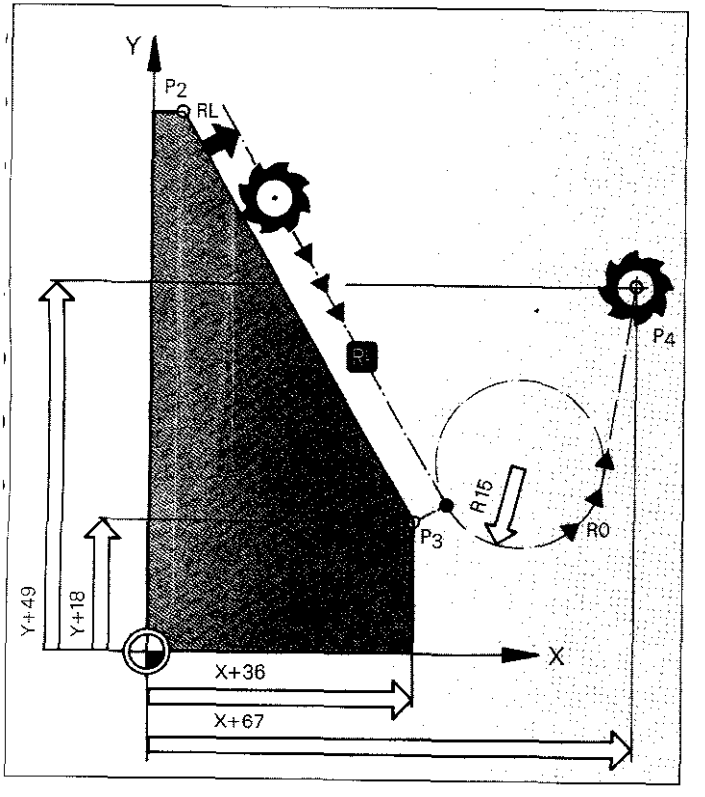

Before and after an RND block a positioning block containing both coordinates of the machining plane must be programmed.

Contour Approach and Departure on a Straight Path

Path angle α = 180°

Starting position P_1 with RL (RR)

```
28 L  X+11   Y+72
             RL F MAX
```

Contour position P_2 with RL (RR)

```
29 L  X+26   Y+57
             RL F120
```

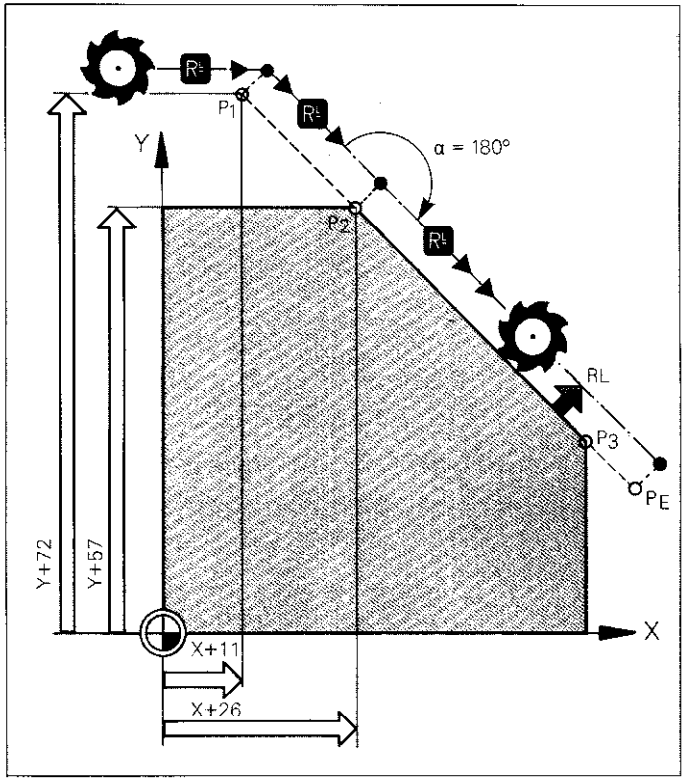

Program structure for contour departure:

Last contour position with RL (RR),

Finishing position P_E with RL (RR).

Contour Approach and Departure on a Straight Path

Path angle α greater than 180°

```
12 L  X+16      Y+50
                RL F MAX
13 L  X+35      Y+44
                RL F80
```

Starting position P_1 with RL (RR)

Contour position P_2 with RL (RR)

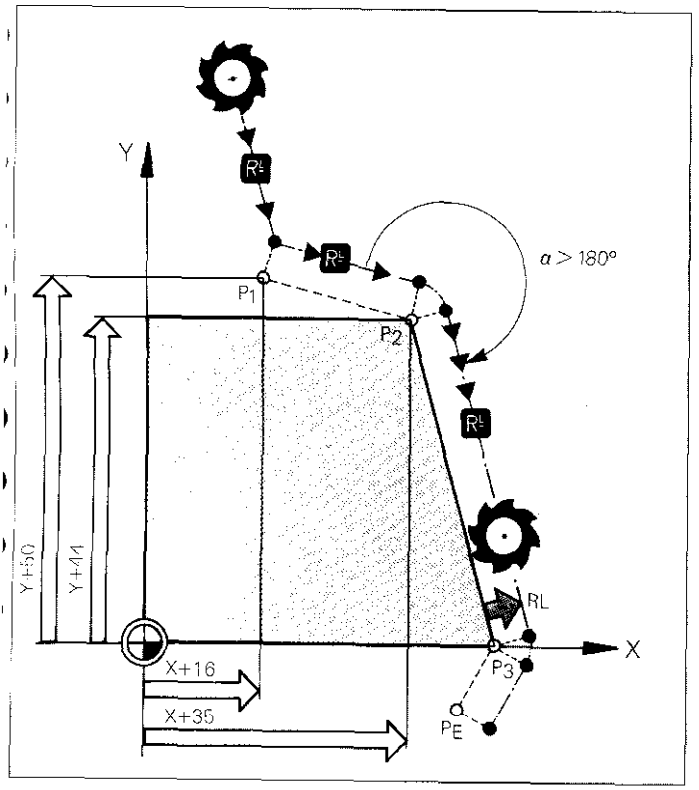

Program structure for contour departure:

Last contour position with RL (RR),

Finishing position P_E with RL (RR).

Contour Approach and Departure on a Straight Path

Path angle α less than 180°

Starting position P_1 with RL (RR)

```
75 L X+59 Y+72
R0 F MAX M
```

Contour position P_2 with RL (RR)

```
76 L X+27 Y+46
RL F120 M
```

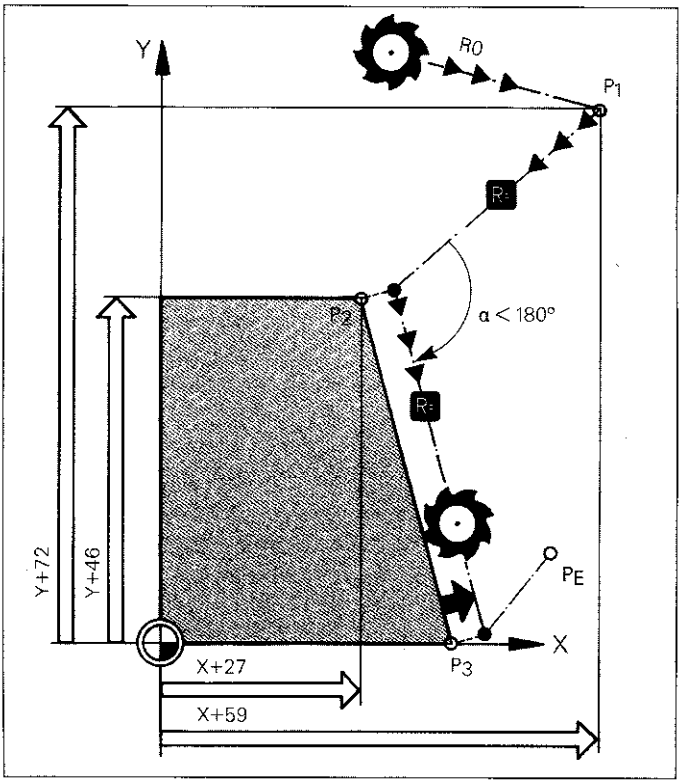

Program structure for contour departure:

Last contour position with RL (RR).

Finishing position P_E with R0.

Notes

CYCL DEF

Peck Drilling

```
12 CYCL DEF 1.0 PECKING
13 CYCL DEF 1.1 SET-UP -7
14 CYCL DEF 1.2 DEPTH -35
15 CYCL DEF 1.3 PECKG -10
16 CYCL DEF 1.4 DWELL 1
17 CYCL DEF 1.5 F180
```

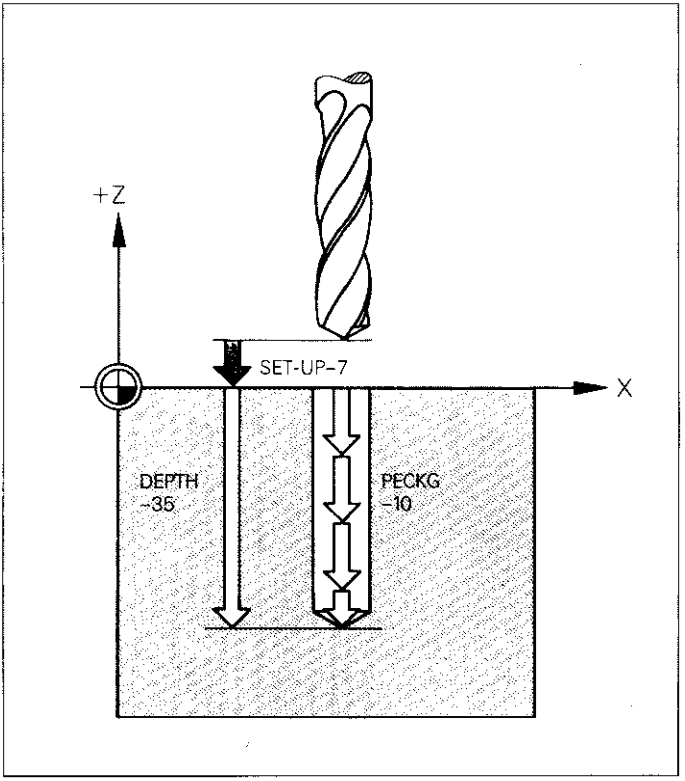

Algebraic signs of cycle parameters are entered in accordance with the direction of tool movement.

Tapping

CYCL DEF

```
55 CYCL DEF 2.0 TAPPING
56 CYCL DEF 2.1 SET-UP -10
57 CYCL DEF 2.2 DEPTH -30
58 CYCL DEF 2.3 DWELL 1
59 CYCL DEF 2.4 F100
```

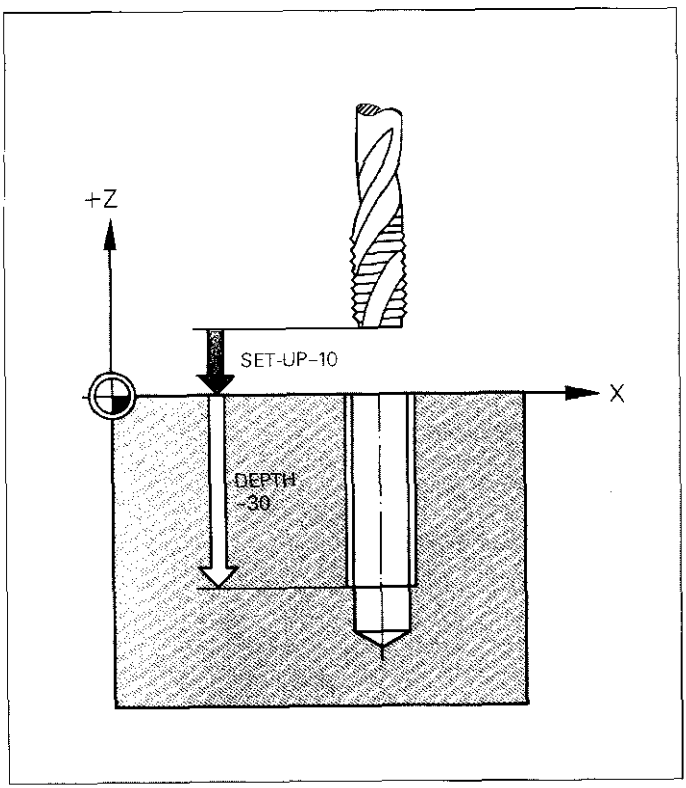

A floating tap holder is recommended for the tapping cycle.

Algebraic signs of cycle parameters are entered in accordance with the direction of tool movement.

Feed rate calculation F:
F = S x P

S: Spindle rpm,
P: Thread pitch.

CYCL DEF

Rigid Tapping

```
22 CYCL DEF 17.0 RIGID TAPPING
23 CYCL DEF 17.1 SET-UP -8
24 CYCL DEF 17.2 DEPTH -35
25 CYCL DEF 17.3 PITCH +4
```

The rigid tapping cycle enables you to tap **without** using a floating tap holder.

Algebraic signs of the SETUP and DEPTH parameters are entered in accordance with the direction of tool movement.

The sign for the PITCH parameter determines the thread direction:

Thread pitch: +

Right-hand thread,

Thread pitch: –

Left-hand thread.

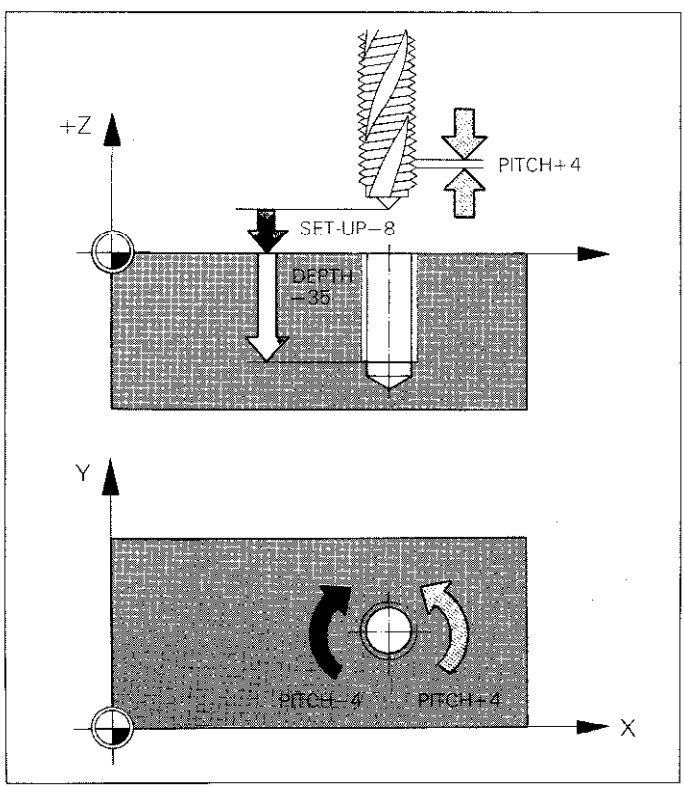

Slot Milling

CYCL DEF

```
14 CYCL DEF 3.0 SLOT MILLING
15 CYCL DEF 3.1 SET-UP -6
16 CYCL DEF 3.2 DEPTH -13
17 CYCL DEF 3.3 PECKG -6.5
   F60
18 CYCL DEF 3.4 X-30.5
19 CYCL DEF 3.5 Y+10.5
20 CYCL DEF 3.6 F180
```

Slot length

Slot width

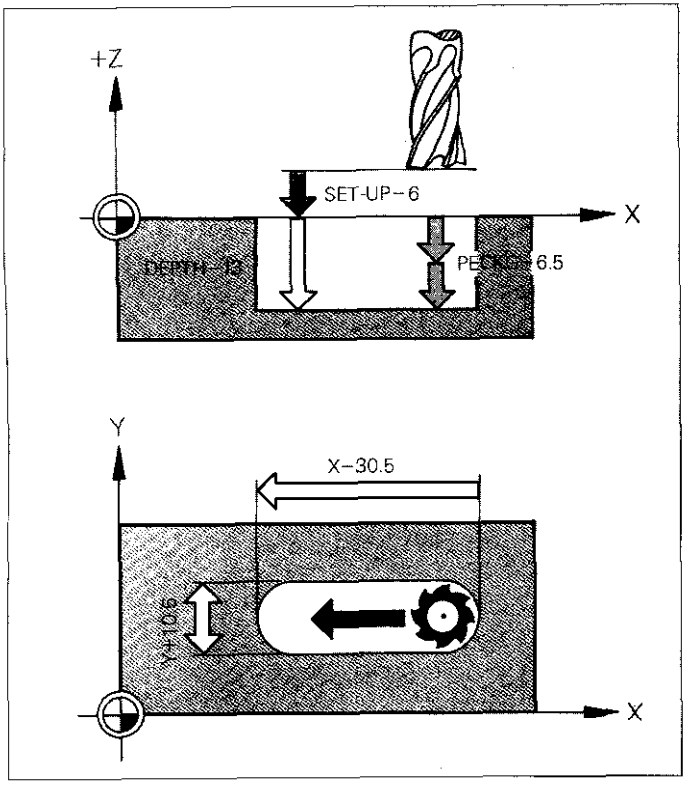

Algebraic signs of cycle parameters are entered in accordance with the direction of tool movement.

The sign for the first side length depends on the direction of tool movement:
Positive axis direction: +,
Negative axis direction: —.

The sign for the second side length is always positive.

CYCL DEF

Rectangular Pocket Milling

```
45  CYCL DEF 4.0  POCKET MILLING
46  CYCL DEF 4.1  SET-UP -6
47  CYCL DEF 4.2  DEPTH -13
48  CYCL DEF 4.3  PECKG -6.5
    F40
49  CYCL DEF 4.4  X+31
50  CYCL DEF 4.5  Y+26
51  CYCL DEF 4.6  F140   DR+
```

First side length

Second side length

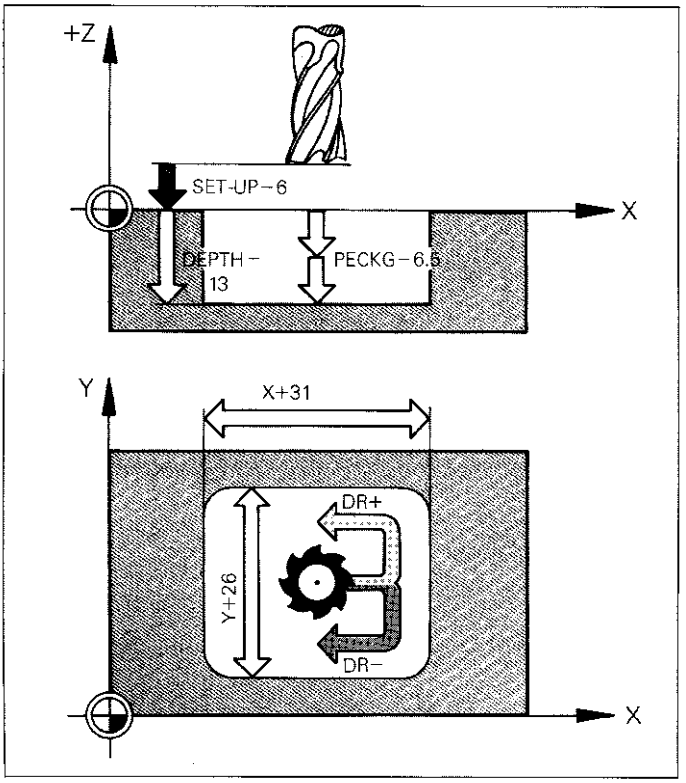

Algebraic signs of cycle parameters are entered in accordance with the direction of tool movement.

Signs for both side lengths are always positive.

DR+: down-cut milling.

DR–: up-cut milling.

Starting direction: positive axis direction of longer side.

Circular Pocket Milling

CYCL DEF

```
44  CYCL DEF 5.0  CIRCULAR POCKET
45  CYCL DEF 5.1  SET-UP -6
46  CYCL DEF 5.2  DEPTH -13
47  CYCL DEF 5.3  PECKG -6.5
    F60
48  CYCL DEF 5.4  RADIUS 15
49  CYCL DEF 5.5  F120    DR-
```

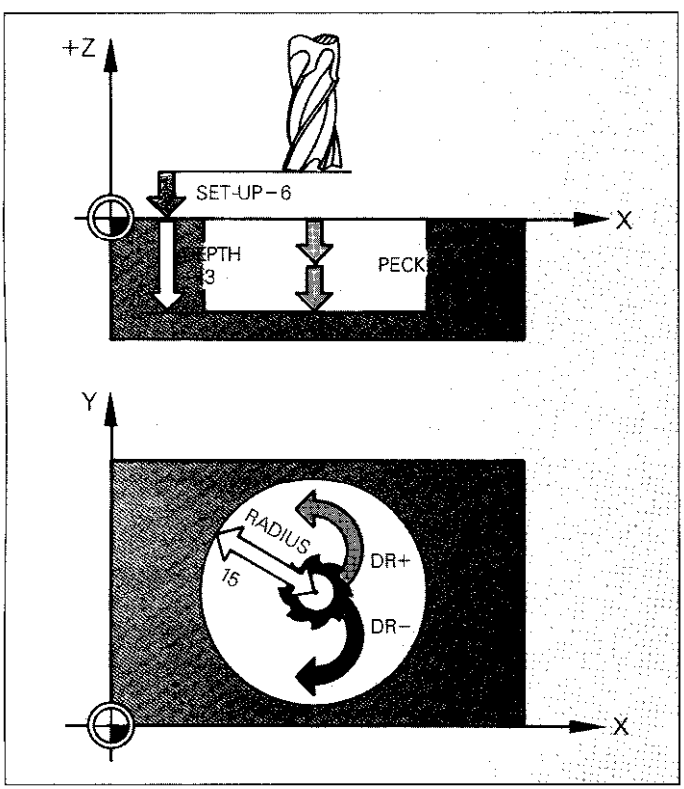

Algebraic signs of cycle parameters are entered in accordance with the direction of tool movement.

DR+: down-cut milling,

DR−: up-cut milling.

Contour Pocket Milling (SL Cycles)

Contour definition: pocket and island

Programming of contour positions in clockwise direction:

Pocket
Radius compensation RR,

Island
Radius compensation RL.

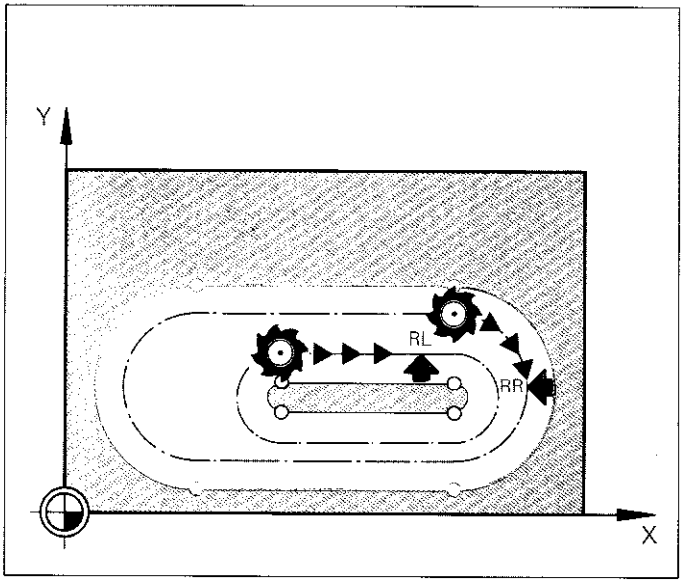

Programming of contour positions in counter-clockwise direction:

Pocket
Radius compensation RL,

Island
Radius compensation RR.

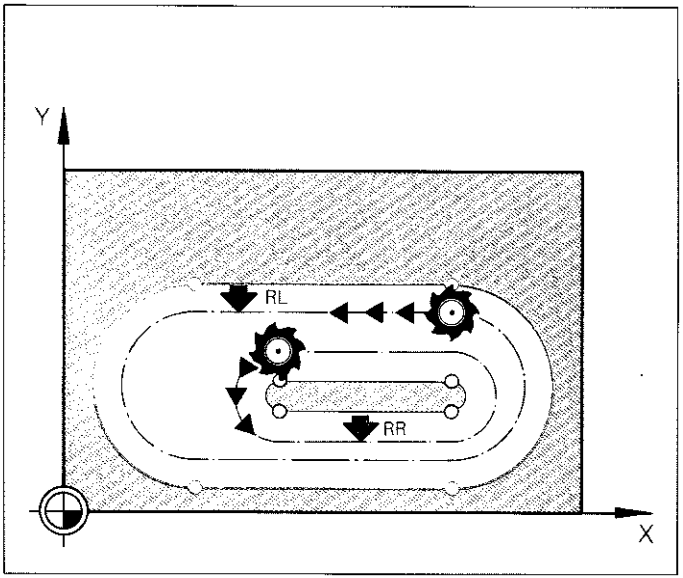

Contour Pocket Milling (SL Cycles)

CYCL DEF

Determination of subcontours

```
18 CYCL DEF 14.0 CONTOUR
19 CYCL DEF 14.1 CONTOUR LABEL
   11 /12 /13
```

Label number of subcontours

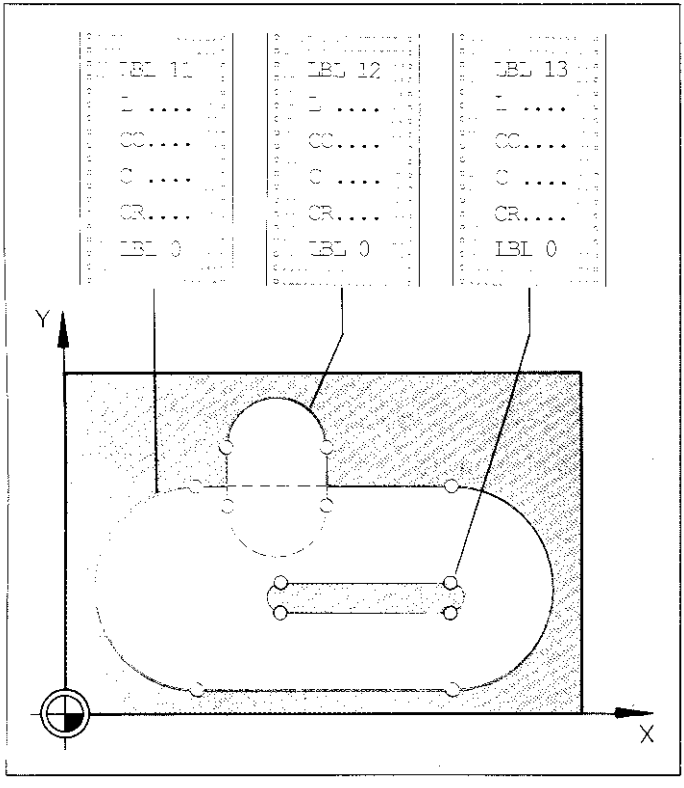

A pocket must be programmed in the first contour label.

CYCL DEF

Contour Pocket Milling (SL Cycles)

Pilot drill

```
23  CYCL DEF  15.0  PILOT DRILL
24  CYCL DEF  15.1  SET-UP -6
                    DEPTH -12
25  CYCL DEF  15.2  PECKG -6
    F40             ALLOW+1
```

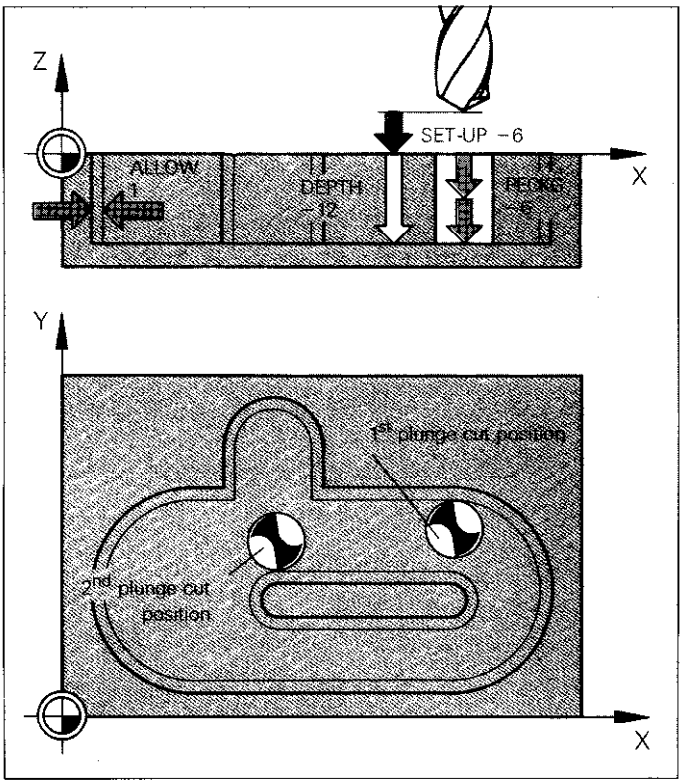

Algebraic signs of cycle parameters are entered in accordance with the direction of tool movement.

Plunge cuts:
First contour positions programmed in the subprograms.

Contour Pocket Milling (SL Cycles)

CYCL DEF

Rough-out

```
34  CYCL DEF 6.0  ROUGH-OUT
35  CYCL DEF 6.1  SET-UP -6
                  DEPTH -12
36  CYCL DEF 6.2  PECKG -6
    F40           ALLOW+1
37  CYCL DEF 6.3  ANGLE +60
                    F120
```

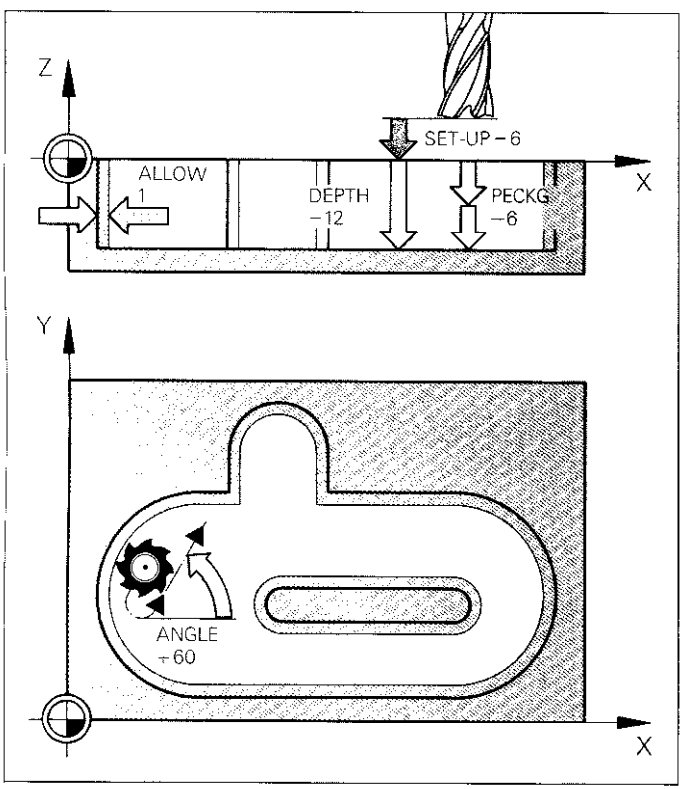

Algebraic signs of cycle parameters are entered in accordance with the direction of tool movement.

Starting positions: plunge cuts of pilot drill cycle.

CYCL DEF

Contour Pocket Milling (SL Cycles)

Contour milling (finish cut)

```
44 CYCL DEF 16.0 CONTOUR MILLING
45 CYCL DEF 16.1 SET-UP -6
                 DEPTH -12
46 CYCL DEF 16.2 PECKG -6
   F60          DR-   F120
```

1st feed rate:
Pecking depth
2nd feed rate:
Contour milling

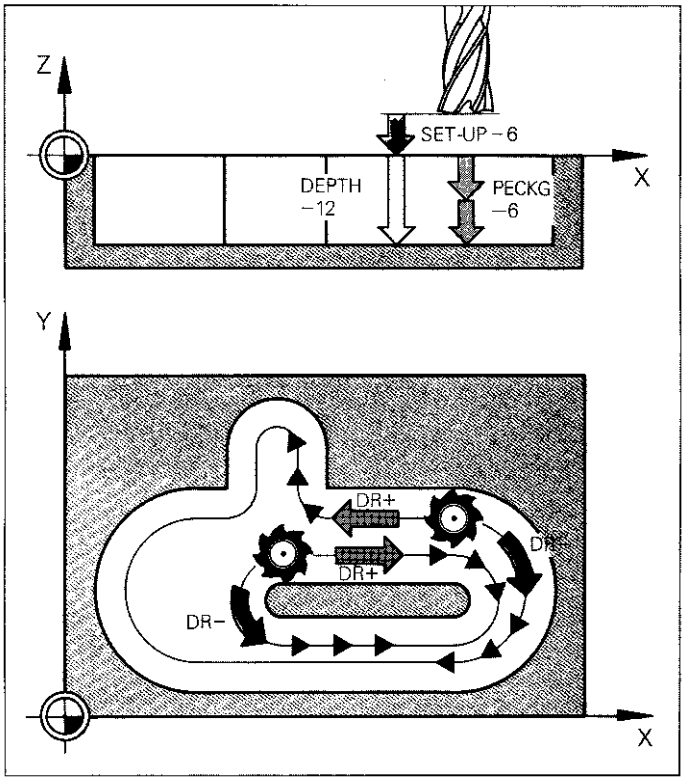

Algebraic signs of cycle parameters are entered in accordance with the direction of tool movement.

DR+: down-cut milling pocket and island,

DR−: up-cut milling pocket and island.

Starting positions: plunge cuts of pilot drill cycle.

Datum Shift

CYCL DEF

```
14 CYCL DEF 7.0 DATUM SHIFT
15 CYCL DEF 7.1 X+31
16 CYCL DEF 7.2 Y+22
```

Coordinate specification referenced to the absolute zero datum

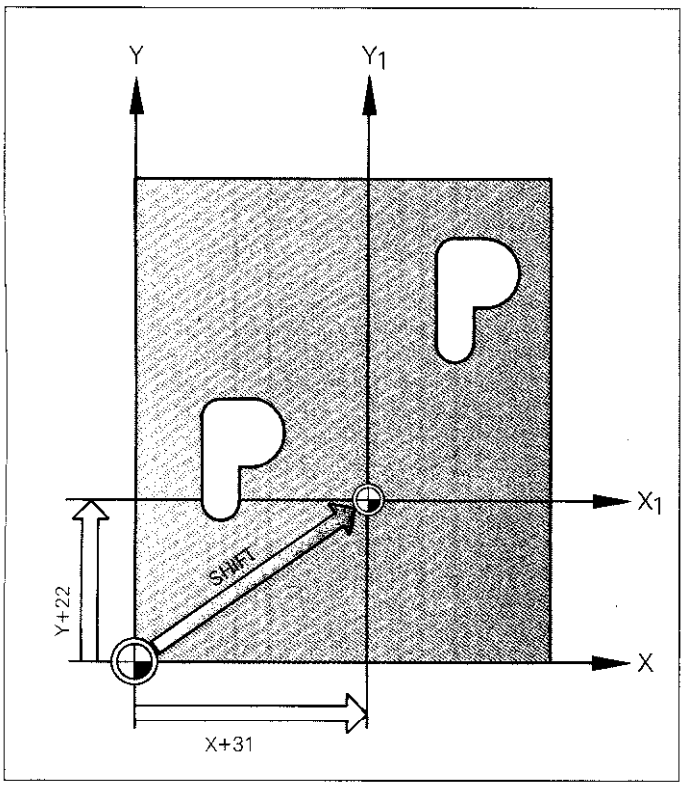

Datum shift is possible in all 4 axes.

Coordinate specification Absolute: referenced to the absolute zero datum,

Incremental: referenced to the last datum set.

Cancellation of cycle:
CYCL DEF 7 with
X0/Y0
Z0/IV0

or M02 or M30
or END PGM.

CYCL DEF

Mirror Image

```
23 CYCL DEF 8.0 MIRROR IMAGE
24 CYCL DEF 8.1 X
```

Sign change of X-coordinates

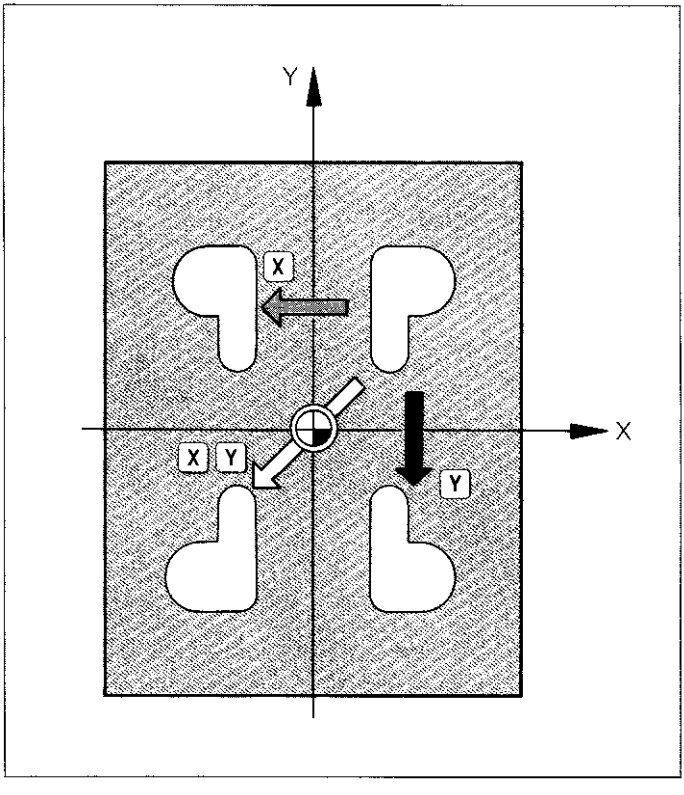

In the working plane, mirror image is possible on max. 2 axes.

Cancellation of cycle:
CYCL DEF 8
Respond to mirror image with NO ENT

or M02 or M30 or END PGM.

Coordinate System Rotation

CYCL DEF

```
78 CYCL DEF 10.0 ROTATION
79 CYCL DEF 10.1 ROT+50
```

Rotation angle

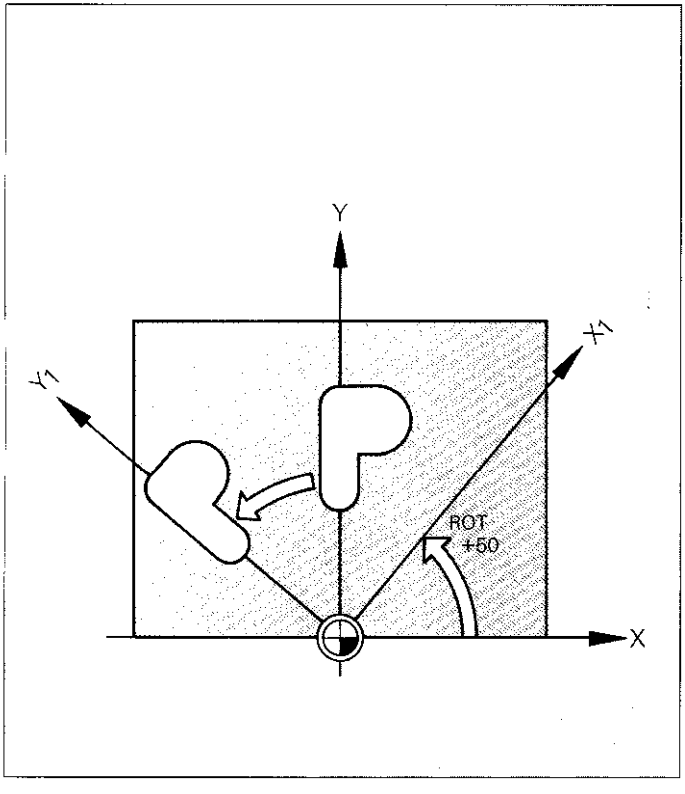

Coordinate system rotation takes place in the working plane.

Cancellation of cycle:
CYCL DEF 10 with ROT 0

or M02 or M30 or END PGM.

CYCL DEF

Scaling

```
98 CYCL DEF 11.0 SCALING
99 CYCL DEF 11.1 SCL 0.5
```

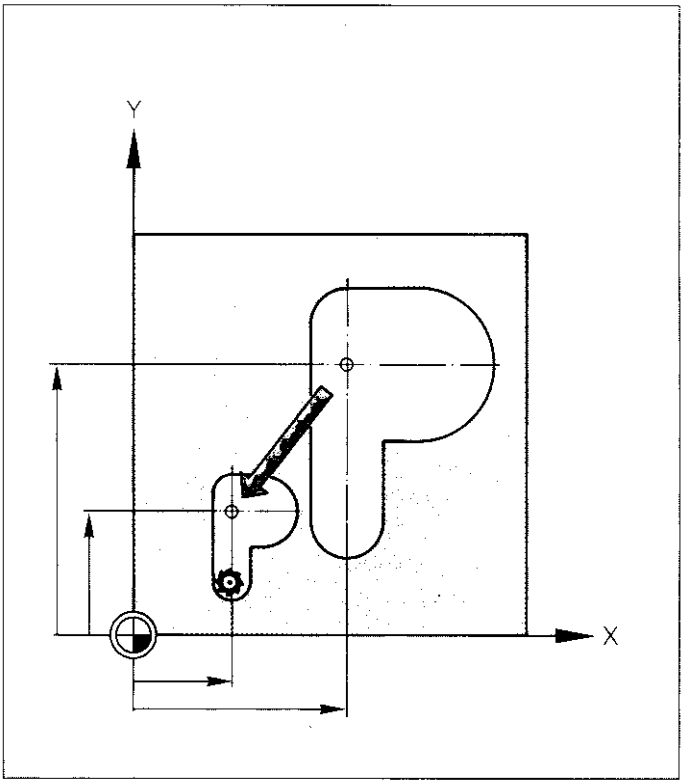

With the scaling factor SCL, all subsequent coordinates and radii within the working plane or the three axes X, Y and Z are multiplied by the scaling factor. Angle values remain the same.

Cancellation of cycle:
CYCL DEF 11 with SCL 1.0

or M02 or M30 or END PGM.

Oriented Spindle Stop

CYCL DEF

```
38 CYCL DEF 13.0 ORIENTATION
39 CYCL DEF 13.1 ANGLE 270
```

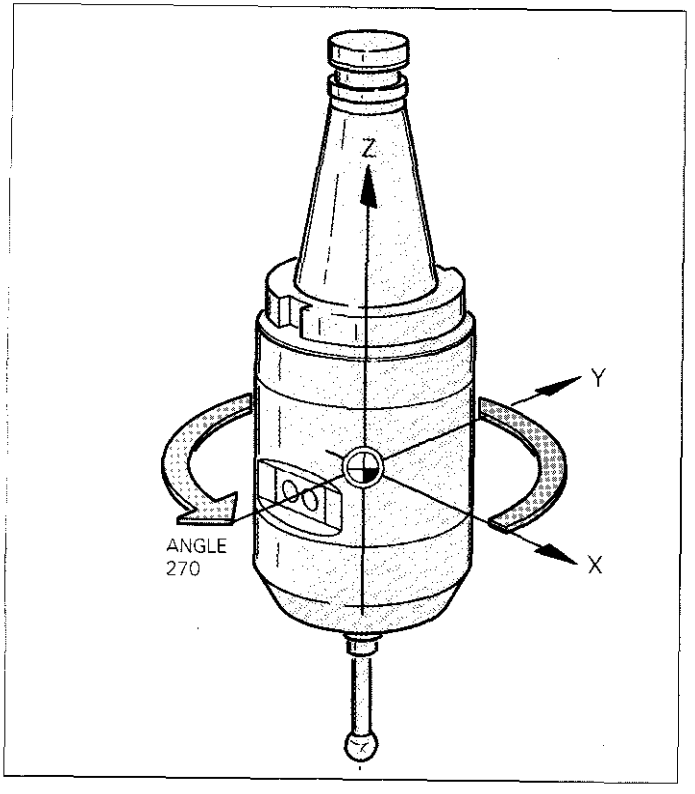

The cycle is called with an M function determined by the machine tool builder.

LBL SET

LBL CALL

Subprograms

Subprogram call

Call subprogram	42 CALL LBL 7 REP
	•
Return jump to first program block	55 M30
	•
Beginning of subprogram	70 LBL7
	•
End of subprogram	80 LBL 0

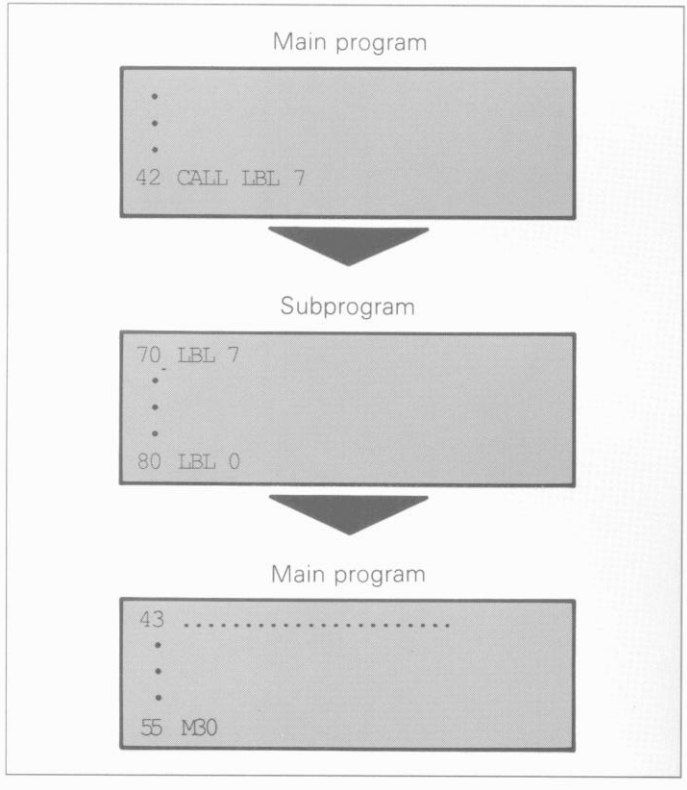

Main program and subprogram form parts of a complete program.

With a subprogram call, repetitions (REP) must not be programmed.

Program Section Repeat


```
28 LBL 51
 •
39 CALL LBL 51    REP 3/3
```

Beginning of program section

Program section end is also a call-up for repetition

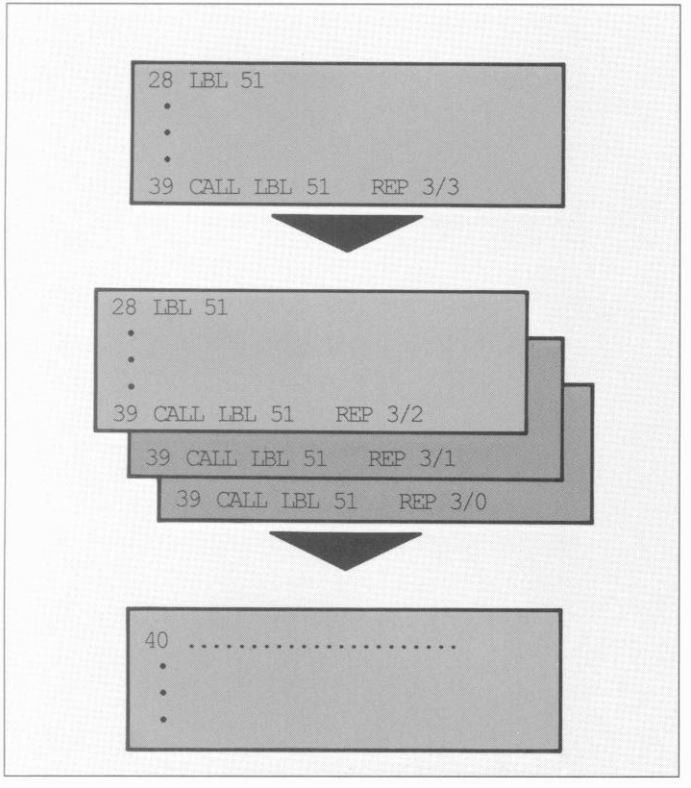

REP 3/3:

The countdown numeral after the stroke indicates the number of repetitions still to be executed. It decreases by 1 on completion of each repetition.

PGM CALL

Program Call

```
84 PGM CALL 55
```

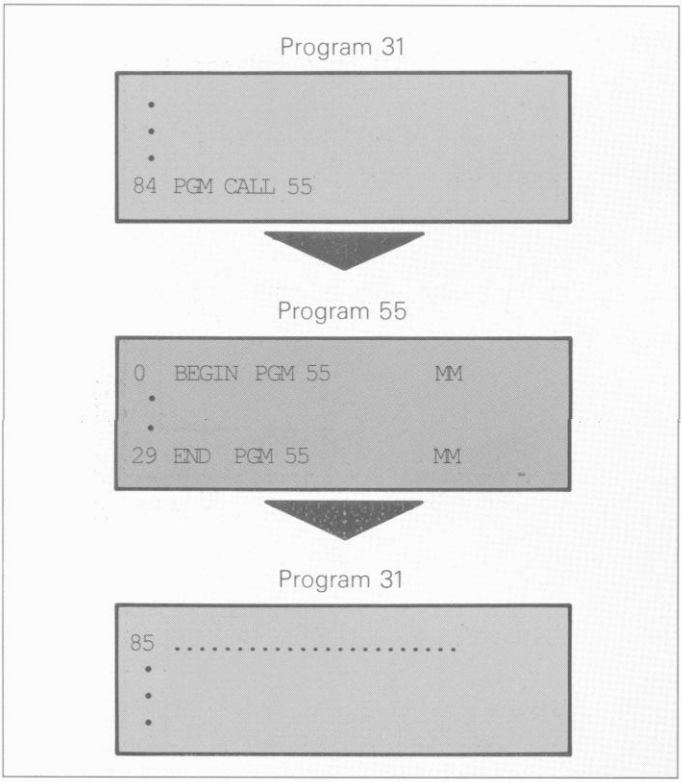

In block 84 of program No. 31 a *jump is made to the* beginning of program No. 55.

At the end of program No. 55 a return jump is made to program No. 31 continuing from block 85.

Program Call Cycle

CYCL DEF

```
18 CYCL DEF 12.0 PGM CALL
19 CYCL DEF 12.1 PGM 55
 •
22 CYCL CALL
```

Call-up of CYCL 12

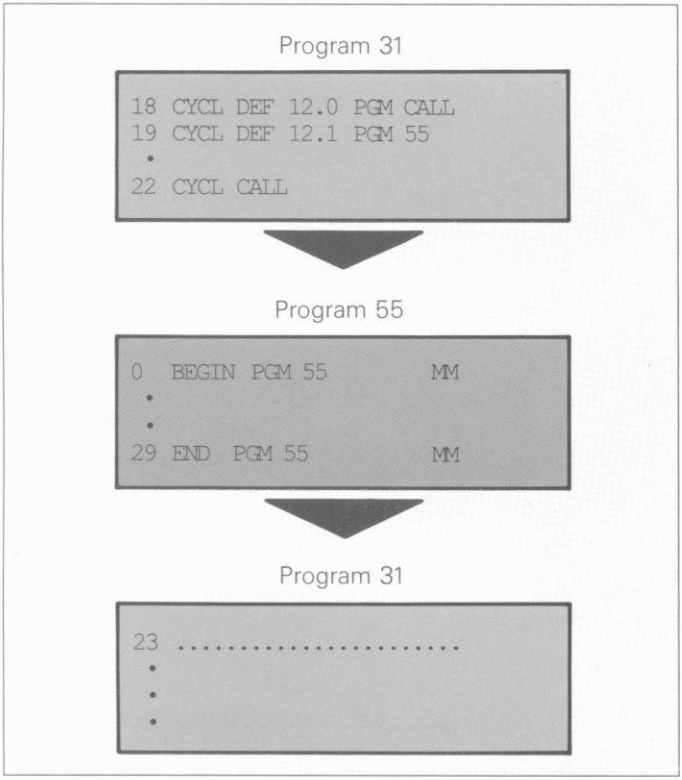

At block 22 of program No. 31 a jump is made to the beginning of program No. 55.

At the end of program No. 55 a return jump is made to program No. 31 continuing from block 23.

Cycle call can be initiated with either CYCL CALL or M99 or M89.

External Data Transmission

V.24/RS-232-C data interface of TNC
Interface modes

V.24/RS-232-C INTERFACE = ME

Transfer rate: 2400 baud

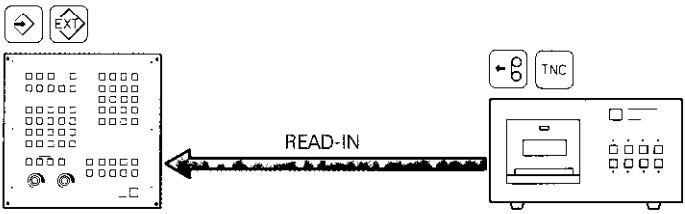

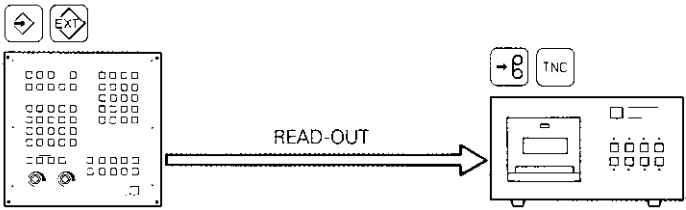

Operation of the magnetic tape unit is only possible in the interface mode ME.

V.24/RS-232-C INTERFACE = ME

Transfer rate: 2400 baud

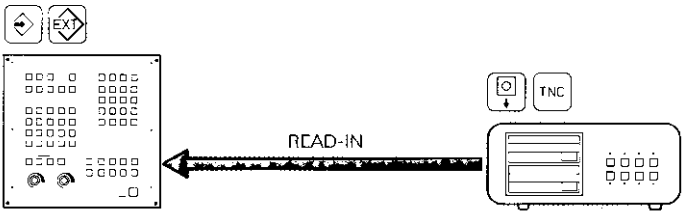

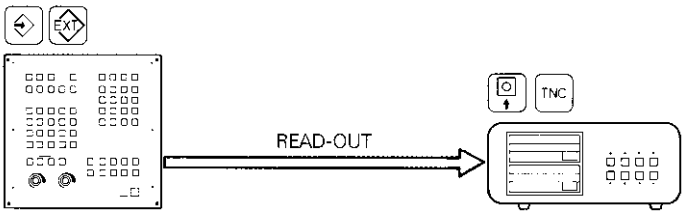

Operation of the disk unit is only possible in the interface modes ME and FE.

External Data Transmission

V.24/RS-232-C data interface of TNC
Interface modes

V.24/RS-232-C INTERFACE = FE

Transfer rate: 38400 baud

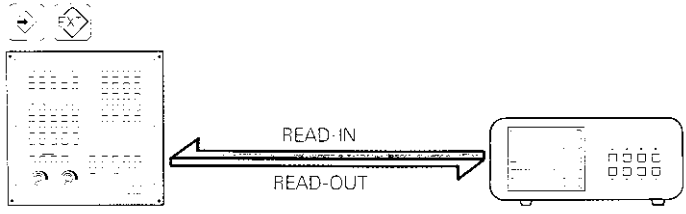

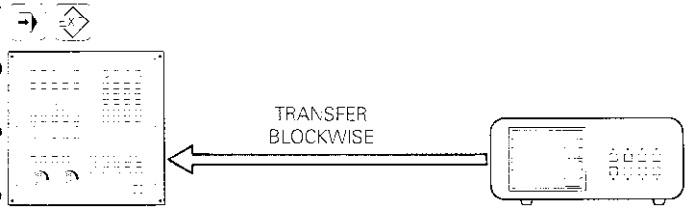

In FE mode, operation of disk unit only via TNC keyboard.

V.24/RS-232-C INTERFACE = EXT

Transfer rate: 38400 baud
other baud rates programmable

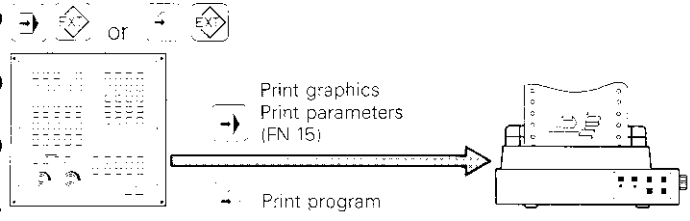

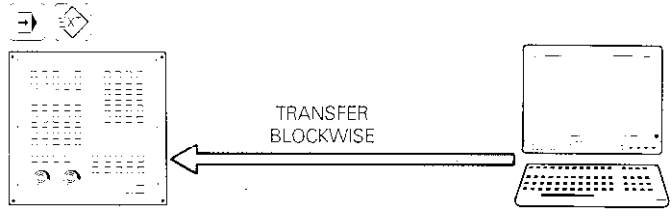

Please observe the notes in the TNC interface description with the EXT-operation.

BLK FORM

Graphics

Spindle axis Z and Point P_{min}	1	BLK	FORM	0.1	Z	X+0
			Y+0			Z−20
Point P_{max}	2	BLK	FORM	0.2		X+85
			Y+120			Z+0

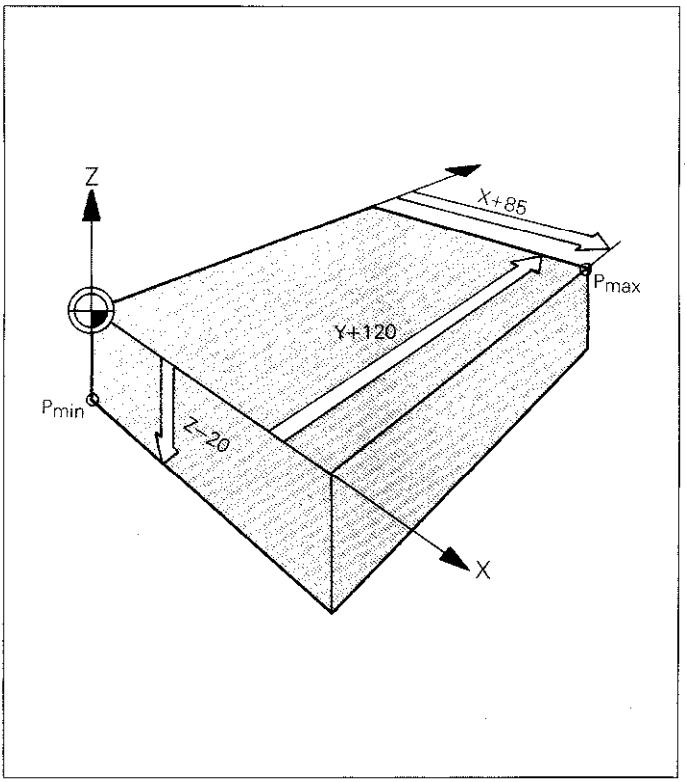

BLK FORM:
Blank form
= shape of blank

The working plane is always perpendicular to the spindle axis.

P_{min}: Only in absolute dimensions

P_{max}: Either absolute or incremental dimensions

Magnify

Manual shift of sectional plane

In opposite direction

Automatic shift of sectional plane

In opposite direction

Shift stop

Select next sectional plane (forward paging)

Select previous sectional plane (reverse paging)

TRANSFER GRAPHICS DETAIL = ENT

Start program run

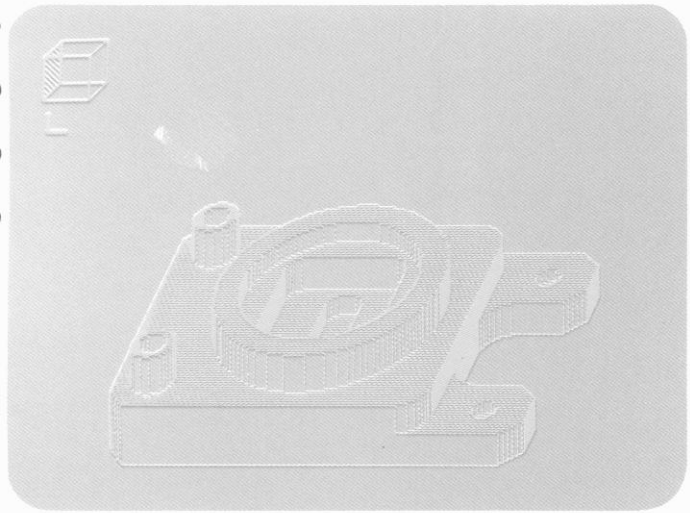

Before selecting the magnify function, the control must be in the graphics mode "3D-view".

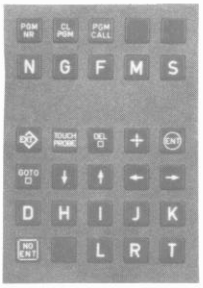

Programming in ISO Format

Letter Addresses

%	Program beginning or program call
%	Program call with G39
A	Rotary axis about X-axis
B	Rotary axis about Y-axis
C	Rotary axis about Z-axis
D	Parameter definition (Parameter Q)
F	Feed code
F	Dwell time with G04
F	Scaling factor with G72
G	Preparatory "GO" function
H	Angle for polar coordinates
H	Rotational angle with G73
I	X-Coordinate of circle center/pole
J	Y-Coordinate of circle center/pole
K	Z-Coordinate of circle center/pole
L	Set label number with G98
L	Jump to label number
L	Tool length with G99
M	Miscellaneous function
N	Block number
P	Cycle parameter for fixed cycles
P	Parameter in parameter definition
Q	Q-parameter
R	Radius for polar coordinates
R	Circle radius with G02/G03/G05
R	Round-off radius w. G25/G26/G27
R	Chamfer with G24
R	Tool radius with G99
S	Spindle speed
S	Spindle position with G36
T	Tool definition with G99
T	Tool call
T	Next tool with G51
U	Additional linear axis parallel to X-axis
V	Additional linear axis parallel to Y-axis
W	Additional linear axis parallel to Z-axis
X	X-Axis command
Y	Y-Axis command
Z	Z-Axis command
	End of block

Parameter Definitions

D-code	Function
D00	Assignment
D01	Addition
D02	Subtraction
D03	Multiplication
D04	Division
D05	Root
D06	Sine
D07	Cosine
D08	Root of sum of squares
D09	if equal, jump
D10	if not equal, jump
D11	if greater, jump
D12	if less, jump
D13	Angle ($r \cdot \sin \alpha$ and $r \cdot \cos \alpha$)
D14	Error number
D15	Print (output of parameters)

G

Programming in ISO Format

G-Codes

G00	Linear interpolation, Cartesian, in rapid
G01	Linear interpolation, Cartesian
G02	Circular interpolation, Cartesian CW
G03	Circular interpolation, Cartesian CCW
G05	Circular interpolation, Cartesian, without direction data
G06	Circular interpolation, Cartesian, tangential
● G07	Single axis block
G10	Linear interpolation, polar, in rapid
G11	Linear interpolation, polar
G12	Circular interpolation, polar CW
G13	Circular interpolation, polar CCW
G15	Circular interpolation, polar, without direction data
G16	Circular interpolation, polar, tangential contour approach
● G04	Dwell
G28	Mirror image
G36	Oriented spindle stop
G37	Contour geometry
● G39	Designates program for call-up via G79
G54	Datum shift
G56	Pilot drill (with G37)
G57	Rough-out (with G37)
G58	Contour mill CW (with G37)
G59	Contour mill CCW (with G37)
G72	Scaling
G73	Coordinate system (plane) rotation
G74	Slot milling
G75	Rectangular pocket milling CW
G76	Rectangular pocket milling CCW
G77	Circular pocket milling CW
G78	Circular pocket milling CCW
G83	Pecking
G84	Tapping
● G79	Cycle call

G-Codes

G17	XY-plane designation, Tool axis Z
G18	ZX-plane designation, Tool axis Y
G19	YZ-plane designation, Tool axis X
G20	FOURTH tool axis
● G24	Chamfer with R
● G25	Rounding of corners with R
● G26	Tangential contour approach (run-on) with R
● G27	Tangential contour departure (run-off) with R
● G29	Transfer of last nominal position value as pole
G30	Blank form definition for graphics – min. point
G31	Blank form definition for graphics – max. point
● G38	Program run STOP
G40	No tool compensation (R0)
G41	Tool radius compensation to contour, offset left (RL)
G42	Tool radius compensation to contour, offset right (RR)
G43	Paraxial compensation extension (R+)
G44	Paraxial compensation reduction (R–)
G50	Erase/Edit protection (at program beginning)
● G51	Subsequent tool number (with central tool memory)
● G55	Touch probe function
G70	Dimensioning in inches (at program start)
G71	Dimensioning in millimeters (at program start)
G90	Absolute dimensioning
G91	Incremental dimensioning
● G98	Assign label number
● G99	Tool definition

● = G-codes which are effective blockwise only

Miscellaneous functions M

M-functions which affect program run
(List of standard miscellaneous functions. These may only be changed by the machine manufacturer.)

M-code	Function	Effective at block begin.	Effective at block end
M00	Program run stop Spindle stop Coolant off		●
M02	Program run stop Spindle stop Coolant off Return jump to first program block		●
M03	Spindle on, clockwise	●	
M04	Spindle on, counter-clockwise	●	
M05	Spindle stop		●
M06	Tool change Program run stop (depends on machine parameters entered) Spindle stop		●
M08	Coolant on	●	
M09	Coolant off		●
M13	Spindle on, clockwise Coolant on	●	
M14	Spindle on, counter-clockwise Coolant on	●	
M30	As per M02		●

Miscellaneous functions M

M-functions which affect program run (List of standard miscellaneous functions. These may only be changed by the machine manufacturer.)

M-code	Function	Effective at block begin.	Effective at block end
M89	Free miscellaneous function or	●	
M89	Cycle call, modally effective (depending on the machine parameters entered		●
M90	Constant path feed rate on external and internal corners	●	
M91	**Within a positioning block:** Workpiece zero datum is replaced by reference point	●	
M92	**Within a positioning block:** The set workpiece zero datum is replaced by a position which is defined by the machine tool builder using a machine parameter, (e.g. tool change position).	●	
M93	Reserved	●	
M94	Rotary table axis display reduction to a value below 360°	●	
M95	Reserved		●
M96	Reserved		●
M97	Compensation of path intersection on external corners: point of intersection instead of transitional arc		●
M98	End comp. of path intersection blockwise		●
M99	Cycle call blockwise		●

Notes

Operating modes
"Manual",
"Electronic handwheel",
"Positioning with MDI",
"Automatic" and
"Program run in single block",
auxiliary modes, parameter programming and single-axis machining via the axis keys are not dealt with in this PILOT.

Detailed information on these topics is provided in the Operating Manual TNC 360.

HEIDENHAIN

DR. JOHANNES HEIDENHAIN GmbH
Dr.-Johannes-Heidenhain-Straße 5
D-83301 Traunreut, Deutschland
☏ (08669) 31-0
FAX (08669) 5061
☏ Service (08669) 31-1272
☏ TNC-Service (08669) 31-1446
FAX (08669) 9899

HEIDENHAIN (G.B.) Limited
200 London Road, Burgess Hill
West Sussex RH15 9RD
☏ (01444) 247711
FAX (01444) 870024

262 999 20 · 5 · 7/95 · h · Printed in Germany · Subject to change without notice